# SWING CHECK STOP VALVE

**370462**

**PN 16**

| No | Part | Material |
|---|---|---|
| 1 | Body | Cast steel GS-CS25 |
| 2 | Bonnet | Cast steel GS-CS25 |
| 3 | Stem | Stainless steel |
| 5 | Seat ring | Stainless steel |
| 6 | Disc | Stainless steel |
| 8 | Shaft | Stainless steel |
| 9 | Link | Steel zinkplated |
| 10 | Bolt/Nut | Steel zinkplated |
| 11 | Gland bolt | Steel zinkplated |
| 12 | Gland | Nodular cast iron GGG40.3 |

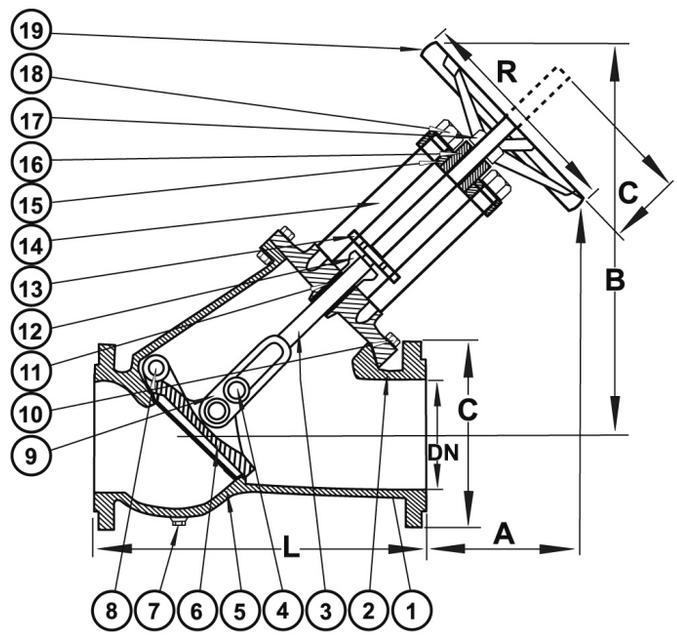


**Variants**:

Other dimensions/materials on request

| DN | D | n | Hcd | A | L | B | Max working-pressure | | Weight Kg |
|---|---|---|---|---|---|---|---|---|---|
| | | | | | | | Mpa 150 C | Mpa 200 C | |
| **100** | 220 | 8 | 180 | 255 | 350 | 500 | 1,6 | | 58.0 |
| **150** | 285 | 8 | 240 | 270 | 480 | 610 | 1,6 | | 96,0 |
| **200** | 340 | 12 | 295 | 335 | 600 | 765 | 1,6 | | 180,0 |
| **250** | 405 | 12 | 355 | 350 | 730 | 860 | 1,6 | | 250,0 |
| **300** | 460 | 12 | 410 | 500 | 850 | 1100 | 1,6 | | 510,0 |
| **350** | 520 | 16 | 470 | 600 | 980 | 1300 | 1,6 | | 750,0 |
| | | | | | | | | | |
| | | | | | | | | | |
| | | | | | | | | | |
| | | | | | | | | | |
| | | | | | | | | | |
| | | | | | | | | | |
| | | | | | | | | | |
| | | | | | | | | | |